EXTENDED WEAR LIFE (E.W.L)
SEALED AND LUBRICATED TRACK (S.A.L.T)

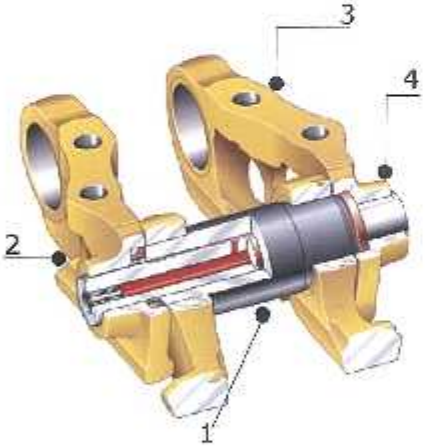

1) Bigger bushing
2) More rail wear material
3) Wider bushingstrap
4) Wider pin boss

Extended Wear Life and Durability

DCF Bulldozer S.A.L.T chains are manufactured for aggresive impact applications.

- Links, pins and bushings to enhance strength, durability and retention
- Additional rail wear material for extended life
- Bigger bushing diameter enhances wear limits
- Wider pin boss for better pin retention

DCF®

TREK®

	Standard 20 Tons Track Link of selected model	EWL 20 Tons Track Link of selected model	Remarks
1) Thicker Link	166.26	168.52	Enhanced strength
2) Pin Boss	201.57	205.57	Enlarged pin boss
3) Track Pin	36.65	38.00	Stronger track pin
4) Track Bush	58.73	59.30	More bushing wear material

EWL & Greased Lubrication Track innovative design benefits

- Internal pin and bushing wear is reduced
- The system prevents abrasives from entering the internal pin & bushing
- Grease reduces normal friction and wear between the pin and bushing
- Internal bushing life is extended approximately 20% compared to Dry Tracks
- Heat Treated Boron steel links for longer life and higher wear resistance
- Our greased and sealed chains are produced with computer controlled seal installation and grease quantities